Jaquar

Introducing

Queen's Prime

A MAJESTIC LEGACY

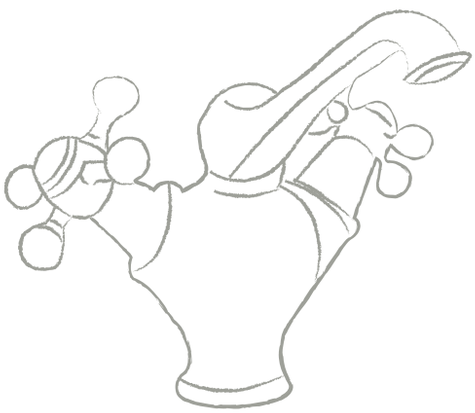

The Queen's range of bathroom solutions from Jaquar epitomises royal characteristics. From the time this distinctive range was born in our design centre, in 1993, it was destined to rule. Winning hearts in the faucets category across India, this hugely popular range from Jaquar has been the unanimous choice of those who sought a royal aura for their opulent bath spaces.

REGAL ELEGANCE FOR A NEW ERA

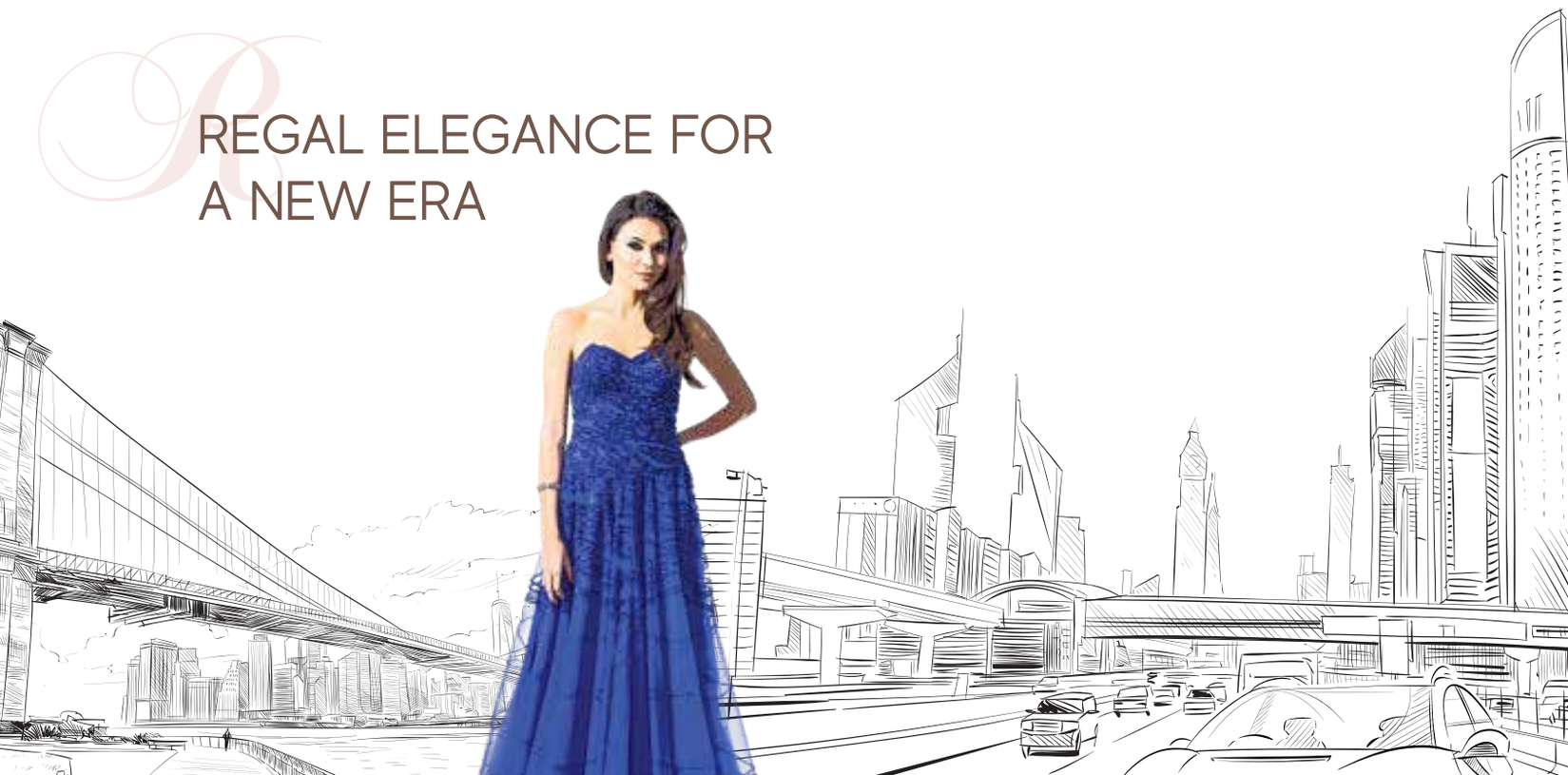

Designed to evoke the regal elegance of the Victorian era, the original form of the Queen's range has now been updated for the modern era with graceful lines and a sleek, slender, updated silhouette.

Queen's is now

Queen's Prime

Discover How Queen's Prime Is Born To Rule - In A Variety Of Modern Royal Aesthetics

HAMPTON

"Bridge the past and the present with a lighter palette of wood and pastels, along with crafted embellishments."

BALMORAL

"Fusing softer colours and harder surfaces, this bathroom achieves a fine balance of materials and textures."

BUCKINGHAM

"Infuse timelessness with stately greys, classic browns and the inclusion of nature's green touch."

WINDSOR

"Classy, contemporary, clean lines combine with the muted natural tones of tender leaves and young stems."

OSBORNE

"The purity of white and geometric patterns come together to complement the femininity of Queen's Prime."

Queen's Prime Collection

SPECIFICATIONS

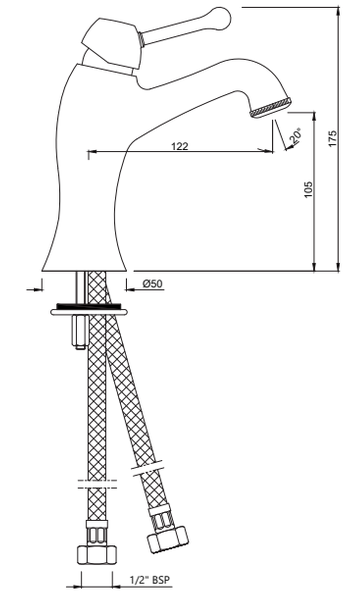

QQP-CHR-7001BPM
Single Lever Basin Mixer
without Pop-up Waste, with
375mm Long Braided Hoses

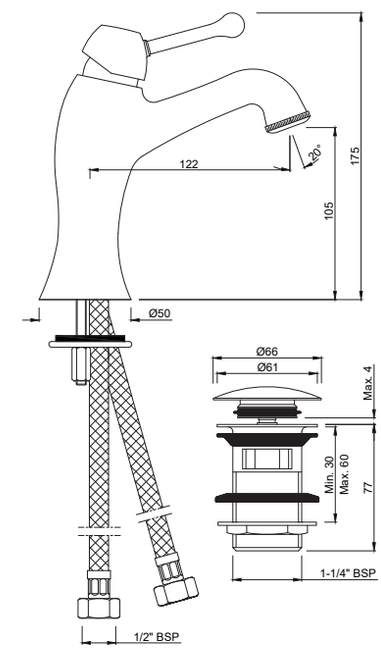

QQP-CHR-7001BPMCLW
Single Lever Basin Mixer without
Pop-up Waste, with 375mm
Long Braided Hoses &
click clack waste (ALD-729)

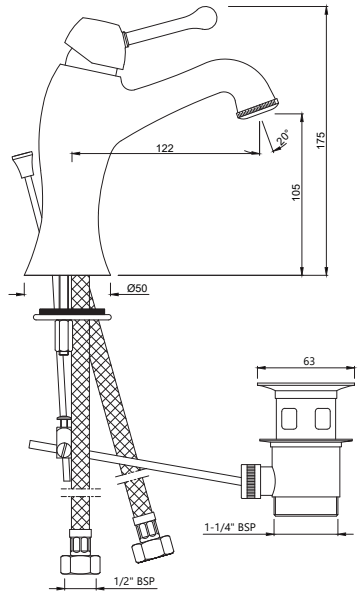

QQP-CHR-7051BPM
Single Lever Basin Mixer with
Pop-up Waste & 375mm
Long Braided Hoses

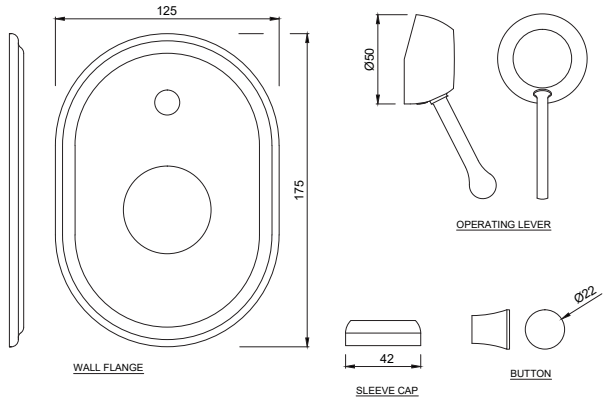

QQP-CHR-7065NKPM
Exposed Part Kit of Single Lever
In-wall Diverter (Compatible with
item ALD-065N)

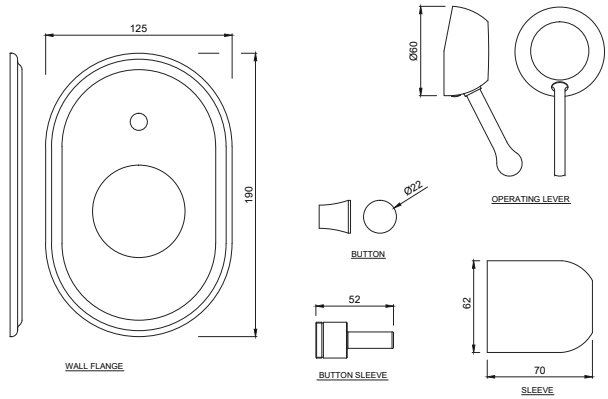

QQP-CHR-7079NKPM
Exposed Part Kit of Single Lever
Hi Flow In-wall Diverter
(Compatible with Item ALD-079N)

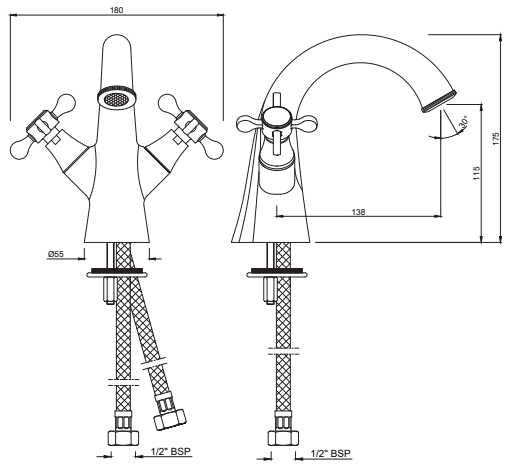

QQP-CHR-7167BPM
Monoblock Basin Mixer without
Pop-up waste, with 375mm
Long Braided Hoses

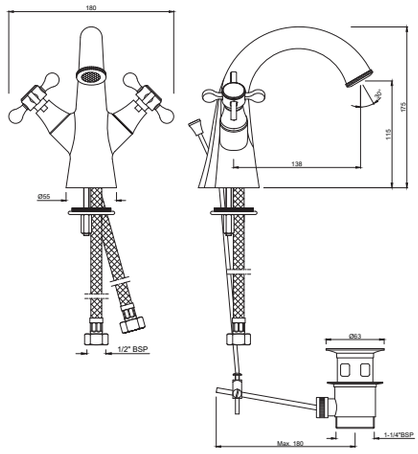

QQP-CHR-7169BPM
Monoblock Basin Mixer with
Pop-up waste & 375mm
Long Braided Hoses

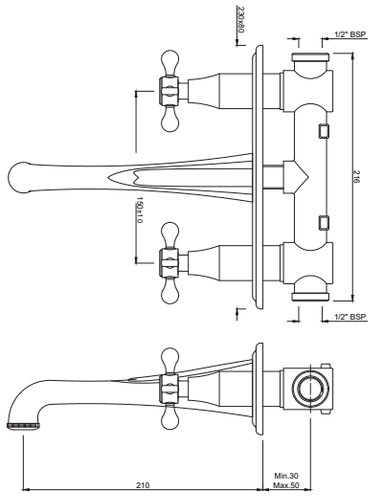

QQP-CHR-7433PM
Built-in Two In-wall Stop
Valves with Basin Spout

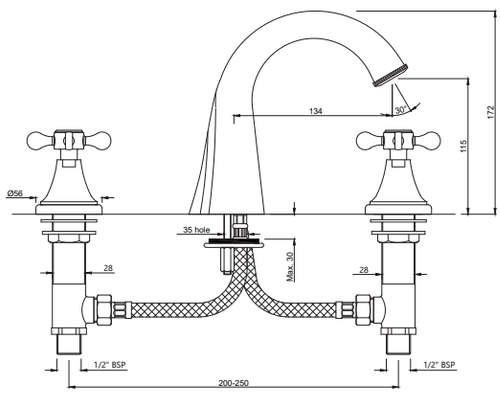

QQP-CHR-7189PM
3 hole Basin Mixer without
Pop-up waste

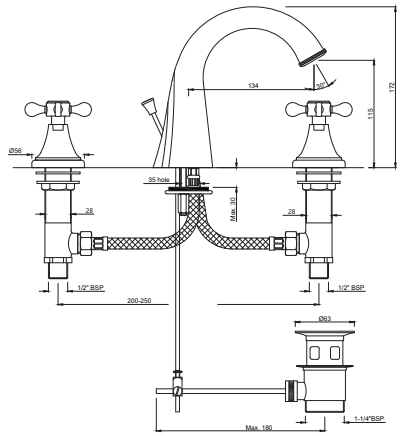

QQP-CHR-7191PM
3 hole Basin Mixer with
Pop-up waste

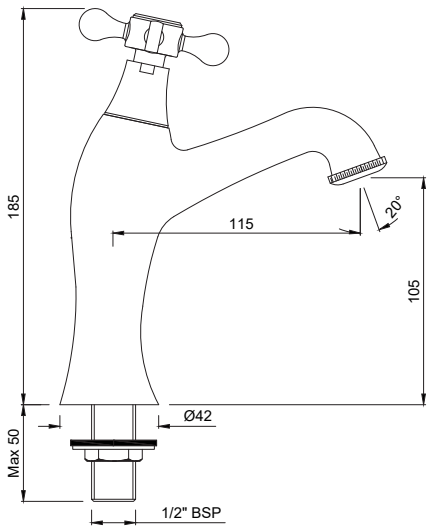

QQP-CHR-7011PM
Basin Tap 1/2 Inch

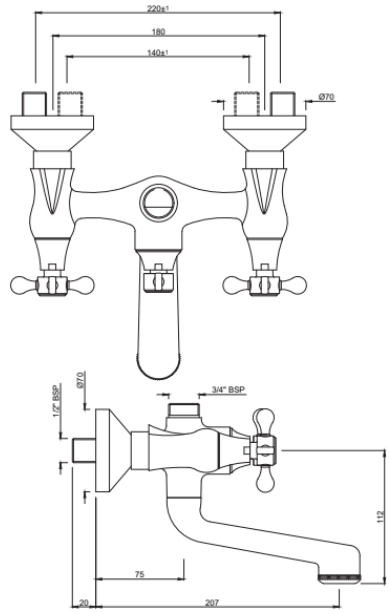

QQP-CHR-7217PM
Bath & Shower Mixer with
Provision for Connection
to Exposed Shower Pipe
(SHA-1211N), Wall Mounted

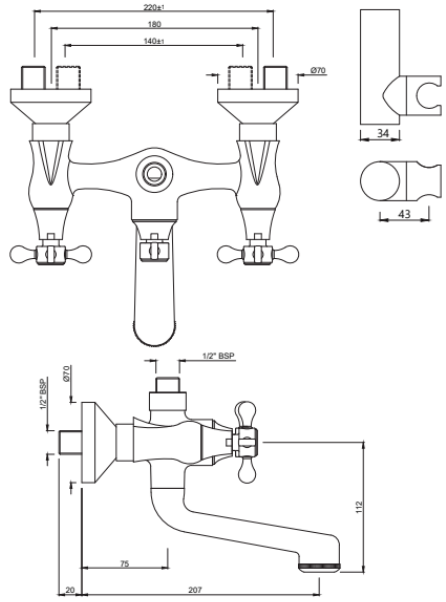

QQP-CHR-7267PM
Bath & Shower Mixer with Connector
for Hand Shower & Wall Bracket,
Wall Mounted

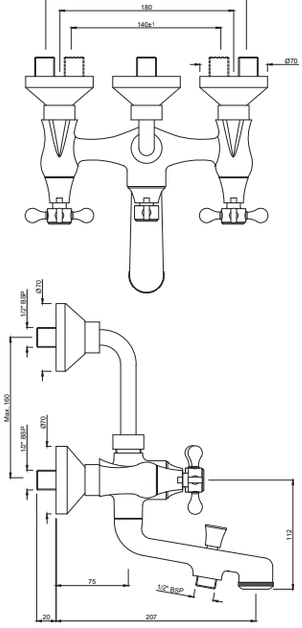

QQP-CHR-7281PM
Bath & Shower Mixer 3-in-1
System with Provision for
Hand Shower & Overhead Shower
Complete with 115mm
Long Bend Pipe, Wall Mounted

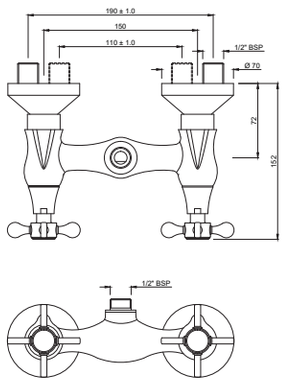

QQP-CHR-7209PM
Shower Mixer

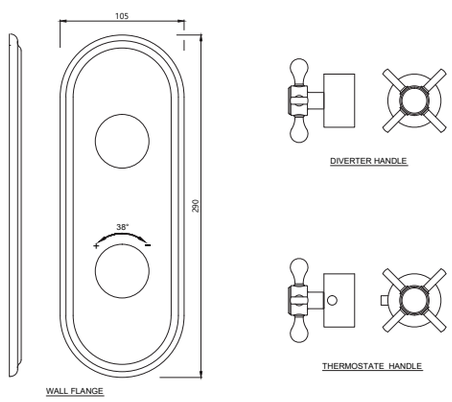

QQP-CHR-7661KPM
Aquamax Exposed Part Kit of Thermostatic Shower Mixer
(Compatible with ALD-661
& ALD-661E)

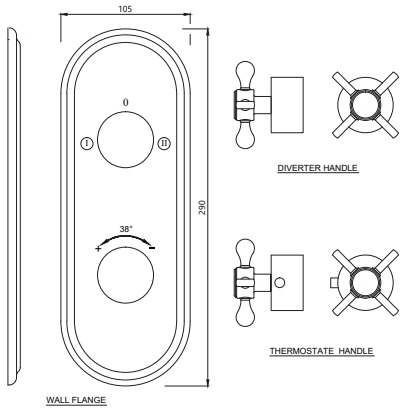

QQP-CHR-7681KPM
Aquamax Exposed Part Kit of
Thermostatic Shower Mixer
with 2-way diverter (Compatible
with ALD-681 & ALD-681E)

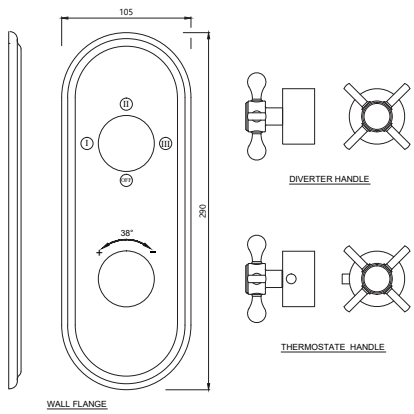

QQP-CHR-7683KPM
Aquamax Exposed Part Kit of
Thermostatic Shower Mixer
with 3-way diverter (Compatible
with ALD-683 & ALD-683E)

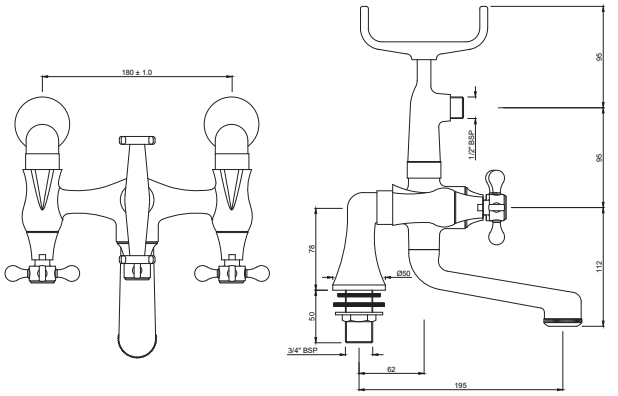

QQP-CHR-7271PM
Bath & Shower Mixer with
Telephone Shower Crutch
(without Shower & Shower
Hose), Deck Mounted

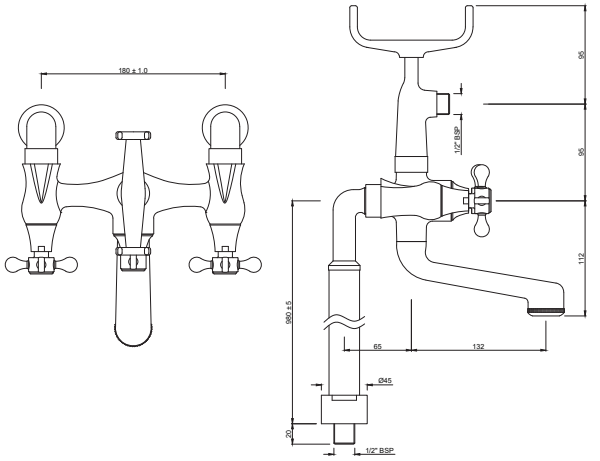

QQP-CHR-7271PMHL
Bath & Shower Mixer with
Telephone Shower Crutch
& 950mm High Rise Legs
(without Shower & Shower Hose),
Deck Mounted

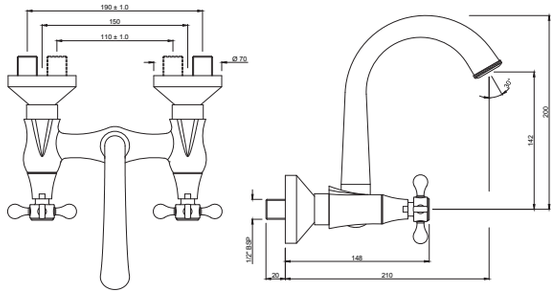

QQP-CHR-7307PM
Sink Mixer with Short Swivel Spout, Wall Mounted

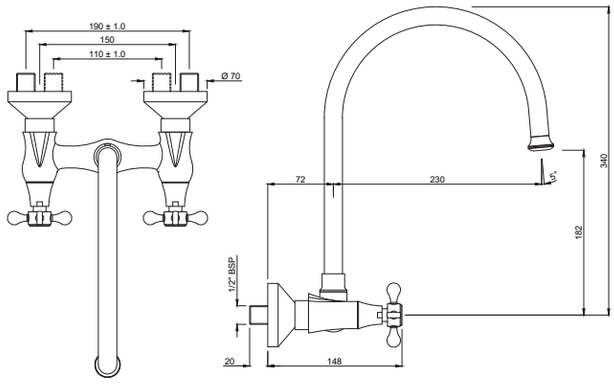

QQP-CHR-7309PM
Sink Mixer with Regular Swivel Spout, Wall Mounted

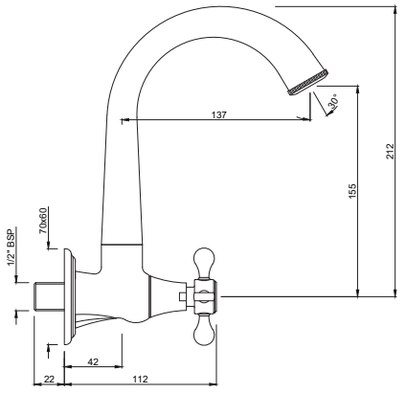

QQP-CHR-7347PM
Sink Tap with Regular
Swivel Spout

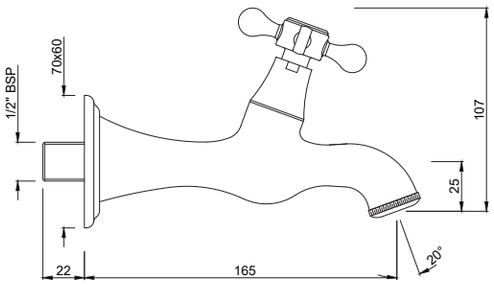

QQP-CHR-7037PM
Bib Tap with Wall Flange

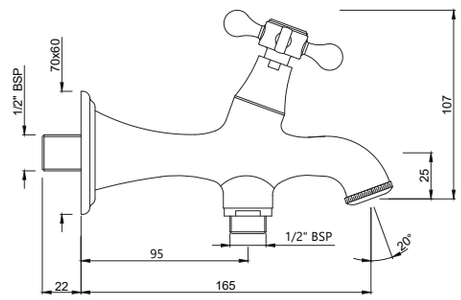

QQP-CHR-7041PM
2-Way Bib Tap with Wall Flange

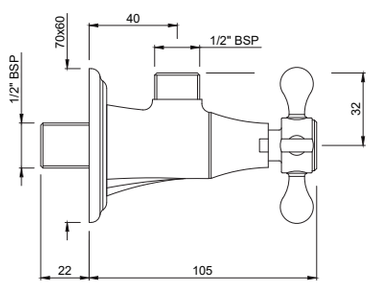

QQP-CHR-7053PM
Angle Valve with Wall Flange

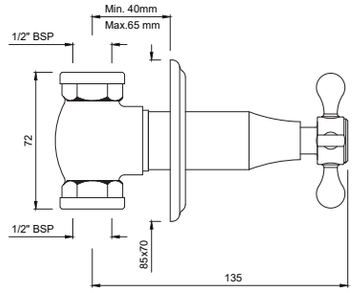

QQP-CHR-7083PM
In-wall Stop Valve with Adjustable
Wall Flange, Size 15 mm

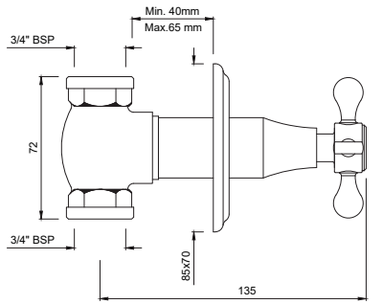

QQP-CHR-7089PM
In-wall Stop Valve with Adjustable
Wall Flange, Size 20 mm

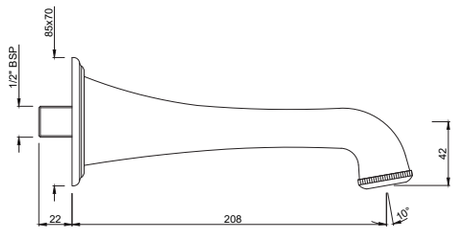

SPJ-CHR-7429PM
Queens Prime Bath Spout with
Wall Flange

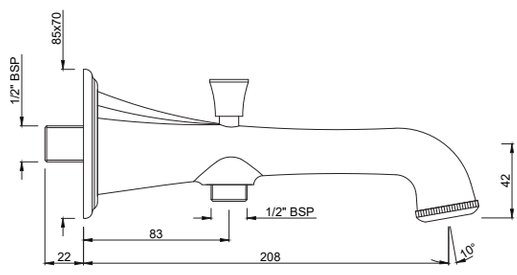

SPJ-CHR-7463PM
Queens Prime Bath
Spout with Diverter & Wall Flange

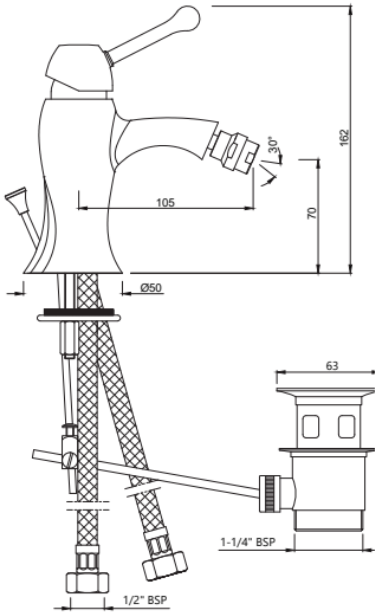

QQP-CHR-7213BPM
Single Lever Bidet Mixer with
Pop-up Waste & 375mm
Long Braided Hoses